THE WORLD LEADER IN
FUME EXTRACTION TECHNOLOGY

AD Base 1

Advantage

The Advantage Base 1 has been designed so that a number of manufacturer's laser engravers can sit on top of the extractor, effectively doubling it up as a work station.

All the Base units in the range have the option of an onboard compressor for a compact installation. BOFA's Easi-Glide filter location mechanism makes filter change easy, quick and safe.

STANDARD FEATURES:

- Easi-Glide filter location mechanism
- Low noise levels
- Filter condition indicator
- Digital flow control

OPTIONAL FEATURES:

- VOC gas sensors (Volatile Organic Compound)
- Onboard compressor
- DeepPleat pre filter
- Remote stop / start interface
- Filter change / System fail signal

The Laser Companion Advantage extraction system for the laser engraving industries.

Featuring optional DeepPleat filter technology

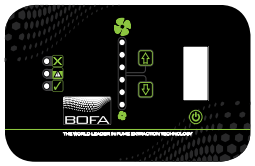

Digital Flow Control

PART NUMBERS

Model	Voltage	Part No.	24V Stop / Start	Filter change / System failure signal	VOC Monitoring	Compressor
AD Base 1 Powder Coated	230V	L1042A	A2001	A2002	A2003	A2007
	115V	L1041A				

REPLACEMENT FILTERS

Model	Pre Filter	HEPA filter	Optional DeepPleat Pre Filter	Disposable Gas Filter 50L
AD Base 1	A1030077	A1030059	A1030257	A1030061

TECHNICAL DATA

	230V	115V
Dimensions (HxWxD)	790 x 700 x 670mm	31.1 x 27.6 x 26.3”
Cabinet Construction	Powder coated mild steel	Powder coated mild steel
Airflow / Pressure	380m³/hr / 96mbar	223cfm / 96mbar
Electrical Data	230v 50/60Hz Full load current: 8 amps / 1.1kw	115v 50/60Hz Full load current: 12.5 amps / 1.1kw
Noise Level	< 63dBA*	< 63dBA*
Weight	86kg	189lbs

* At typical operating speed.

PRE FILTER SPECIFICATIONS

Surface Media Area	2.2m²
Filter Media	Polyester
Filter Media Construction	8 Pocket
Filter Efficiency	F8 (95% @ 0.9 microns)

HEPA FILTER SPECIFICATIONS

Surface Media Area	7.5m²
HEPA Filter Media	Glass Fibre
HEPA Media Construction	Maxi Pleat

GAS FILTER SPECIFICATIONS

Treated Activated Carbon	25kgs
Filter Housing	Mild Steel
Filter Efficiency	H13 (99.997% @ 0.3 microns)

FILTER OPTION:

OPTIONAL DEEPPLEAT PRE FILTER SPECIFICATIONS

Surface Media Area	12m² approx
Filter Media	Glass Fibre
Filter Media Construction	Maxi Pleat Construction with Webbing Spacers
Filter Housing	Zintec mild steel
Filter Efficiency	F8 (95% @ 0.9 microns)

AIRFLOW THROUGH FILTERS

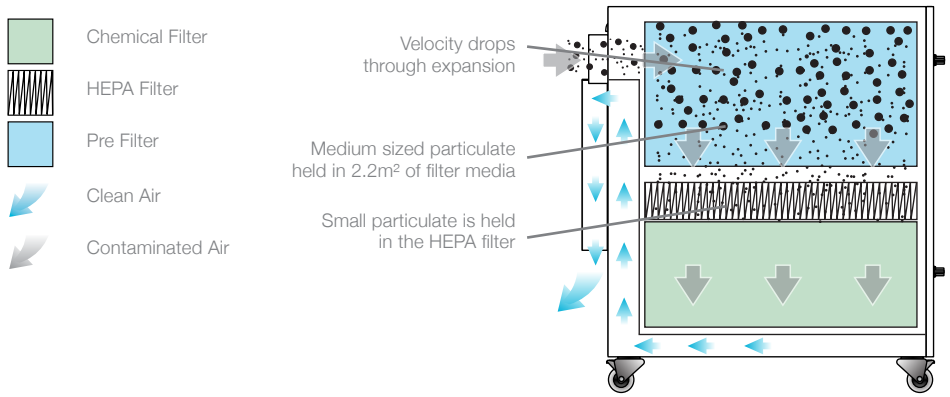

TECHNICAL SPECIFICATION

1 Unit / Filter Condition Display
2 On / Off Switch
3 Compressed Air Outlet
4 Power Cable
5 Castors
6 Door Hinge
7 Hose Inlet Connection - 100mm
8 Exhaust Outlet
9 Optional Compressor Cooling Inlet
10 Motor Cooling Inlet

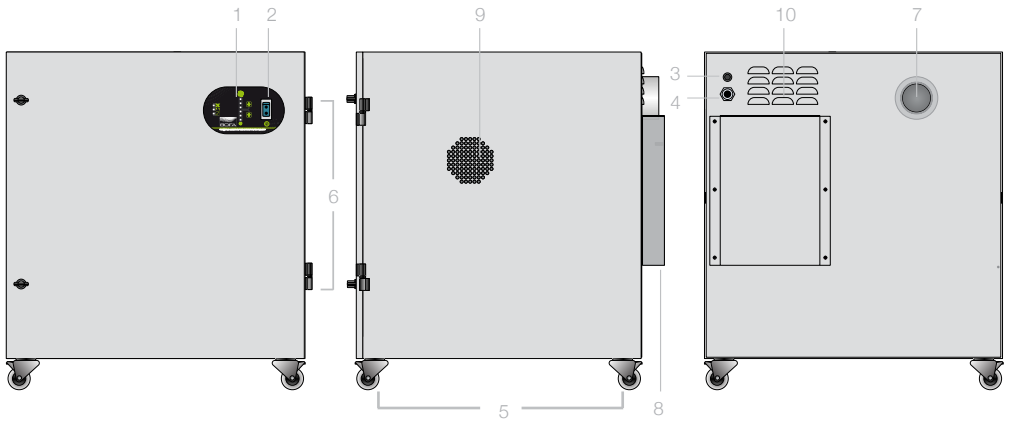

Other hose kits and filters are available. All of the above units are fitted with our standard filter combinations. For specific applications please call us for details. Replacement filters should always be ordered using the part number on the filters inside your extractor to ensure the correct filter is ordered. Datasheet correct at time of print.

Date:8/2/12 V:1.2

BOFA INTERNATIONAL LTD
Tel: +44 (0) 1202 699 444 Fax: +44 (0) 1202 699 446 Email: sales@bofa.co.uk Web: www.bofa.co.uk

BOFA AMERICAS, INC
Tel: (618) 635 4465 Fax: (866) 707 2632 Email: sales@bofaamericas.com Web: www.bofaamericas.com

British Quality